PHM Architecture of Naval Gun Weapon System Based on the Data Analysis

Zhansheng Shen, Jinjun Li and Lei Wang

Department of naval gun, Dalian Naval Academy, Dalian 116018

szs66005747@163.com

Keywords: Naval Gun Weapon System, Data Analysis, PHM

Abstract. In view of the deficiencies in the reactive maintenance and preventive maintenance methods of naval gun systems, research on Prognostics and Health Management (PHM) Architecture based on data analysis，the architecture and function modules of PHM system are proposed. It is composed of functional modules and key technologies analysis involved, aiming to improve the whole life cycle health management capabilities of naval gun systems, which can be used by relevant research and decision makers.

With the rapid development of information technology and weapons technology, modern naval gun weapon systems have become increasingly complex with greatly increased of comprehensive performance at the same time. Modern naval gun weapon system is composed of naval gun and fire control system, including of a large number of mechanical components and electronic components, which is hard to avoid malfunction with its health status changing constantly, due to the use fixed number of year, environmental conditions, production quality, usage, use frequency, engine parts aging, fatigue, shock, vibration, electromagnetic interference, etc.. Prediction of equipment failure and health management can carry out the state of the equipment analysis, forecasting and early warning, which provides a scientific basis for equipment training and maintenance, improving equipment reliability and safety, ensuring the good combat readiness of naval gun weapon system with “fighting at any time”、 “start shooting”、“continuous firing”、“good shooting”. Based on the requirements of predicting maintenance, Prognostics and health management (PHM) architecture of naval gun weapon system was presented to solve the problems of predetermined maintenance and preventive maintenance based on data analysis.

1 PHM of The Naval Gun Weapon System

The main methods of weapon system maintenance include reactive maintenance、preventive maintenance and predicting maintenance[1]. Reactive maintenance is also called maintenance after the event, which carry out maintenance after the equipment malfunction or damage happened. Preventive maintenance is a planned way of maintenance, which carry out maintenance according to the prescribed interval time and based on the planned content, including regular inspection, regular repairing and regularly replaced, etc. Predicting maintenance carry out maintenance when the malfunction or damage of equipment will happen, based on condition monitoring or data analysis. At present, the most of naval gun weapon system maintenance is reactive maintenance after the malfunction or damage happened and preventive maintenance by the prescribed interval time, which is difficult to support the integrity and combat readiness requirements for weapon system effectively, and consume a good deal of resource. Predicting maintenance has a good application prospect with a small scale of logistic disposition、good benefit of military economic、high efficiency maintenance of equipment、 more automation and etc..

1.1 Prognostics and Health Management

The concept of prognostics and health management (PHM) has been put forward with the development of maintenance，as the case may be[2]. The core content of the concept changes the weapon equipment management from the state monitoring to health management, gives prominence to predictive ability of equipment failure of system makeup, realize the fault identification and management of weapon equipment system, and instructs maintenance plan and guarantee scheme, which expand further from BITE and the ability of state monitoring. The so-called failure prediction

  DOI: 10.25236/icicta.2019.002

refers to the projected diagnoses of the state of components or system, including confirmed the residual life of components or the length of normal work time. The problems solving of PHM is to evaluate the current health state of naval gun weapon system, and predict the change trend of naval gun weapon system with good condition at the next stage. According to the predictive results, it takes effective preventive measures for the periodic 、random and multiple failure, reduces the probability of failure, and then guide the use effectively of naval gun weapon system maintenance.

1.2 The Main Method of PHM

The technology of PHM usually is using the advanced sensor technology to acquire and recognize the related state parameter of system property, then treat these data information scientifically with related model and algorithm to complete the system fault detection, isolation, diagnosis, prediction, and other functions. Through all sorts of information data, prognostics is expected to the next healthy state of weapon system with the aid of all kinds of reasoning technology, such as the monitoring parameters of system state, environmental data, test data, etc. According to the complexity、the forecasting ability and the applicable scope, the main methods of prognostics include three kinds at present, which are model-based prognostics, data-based prognostics and statistical reliability-based prognostics[3]. Then, the common methods of model-based prognostics include bayesian prediction method, ARMA prediction method, and hidden markov prediction method, etc.. The main methods of data-based prognostics include artificial neural network, fuzzy logic, etc., which establish the models of nonlinear, not transparent and not targeted specific object, and realize the future value calculation and prognostics. The main methods of statistical reliability-based prognostics use the historical fault data, analyze the failure distribution of component in such statistics, etc., when the reliability reaches preset values, we will take cognizance of the equipment failure, determine the reliability currently and get the prediction results of the system by the statistical data.

1.3 PHM of The Naval Gun Weapon System

In the whole life cycle, each kind of mechanical device and electronic components of naval gun weapon system may appear all sorts of different types of faults by the influence of the fixed number year of storage, live firing frequency and frequency, and the working environment, etc.. All sorts of different types of factor beget such faults, it is difficult to predict the timing of each one. However, macroscopic characteristics and development law of the faults of various parts can be obtained through related data analysis, and then realize the prediction of failure and repair. The data sources of failure analysis and prediction include three aspects [4]: the first one is the system state data provided by BITE, the second one is getting the related state data by the live state monitoring of weapon system through setting related sensors, the third one is relevant fault information data accumulated in the process of weapon system using. Based on these data collection and analysis, it can carry out the analysis and prediction of the failure law of naval gun weapon system. There have been get some research results of PHM of naval gun weapon system, which are research methods, BITE, sensor testing prediction, etc. The fault prediction algorithm based on pattern recognition and artificial intelligence also has some of the research and application. But, there are still many problems, main including data acquisition channels incomplete, information collection not comprehensive and data using inadequate, resulting in the lack of a scientific and effective support of naval gun weapon system PHM work.

2 PHM Architecture of Naval Gun Weapon System Based on The Data Analysis

The basic idea of PHM of naval gun weapon system based on the data analysis is the fusion of data driven and statistical distribution analysis method, construct the failure data warehouse of naval gun weapon system with the help of modern technology of data warehouse, carry out fault prediction and prediction repair of naval gun weapon system through the mining analysis of failure data. Its main function is to diagnose naval gun weapon system's health, prognosticate the fault and give the equipment maintenance decision scheme before the failure happen. The specific features include: state detection, fault diagnosis, fault prediction, fault isolation, health management and service life

tracking. In order to realize the function, it needs to have the following abilities[4]: the first one is the ability of system self-test, the second one is the ability of state data acquisition of naval gun weapon system components and each subsystem, the third one is the powerful diagnostic ability, which is to detect and isolate fault and failure state of system and system components with the aid of system model, system status and information technology, the fourth one is the prediction ability, which is to predict the following fault of the system and estimate the residual life of system or system components, the fifth one is the state management function, which is to guarantee the maximum completion of system task when the system function dropping.

2.1 PHM Frame Structure of Naval Gun Weapon System

OSA - CBM (Open System Architecture for Condition -based Maintenance) frame structure defines the function module of PHM System and can guide the construction of naval gun weapon System PHM System [3]. Generally speaking, the system architecture of PHM has three types: distributed structure, centralized structure and focus-distributed structure [4]. Naval gun weapon system belongs to the large-scale complex weapon equipment system, which is suitable for the focus-distributed structure of PHM system frame. Thus, according to system functional requirements of PHM of naval gun weapon system based on data analysis and OSA-CBM system structure, it is to constructed PHM structure of naval gun weapon system. As is shown in Fig. 1.

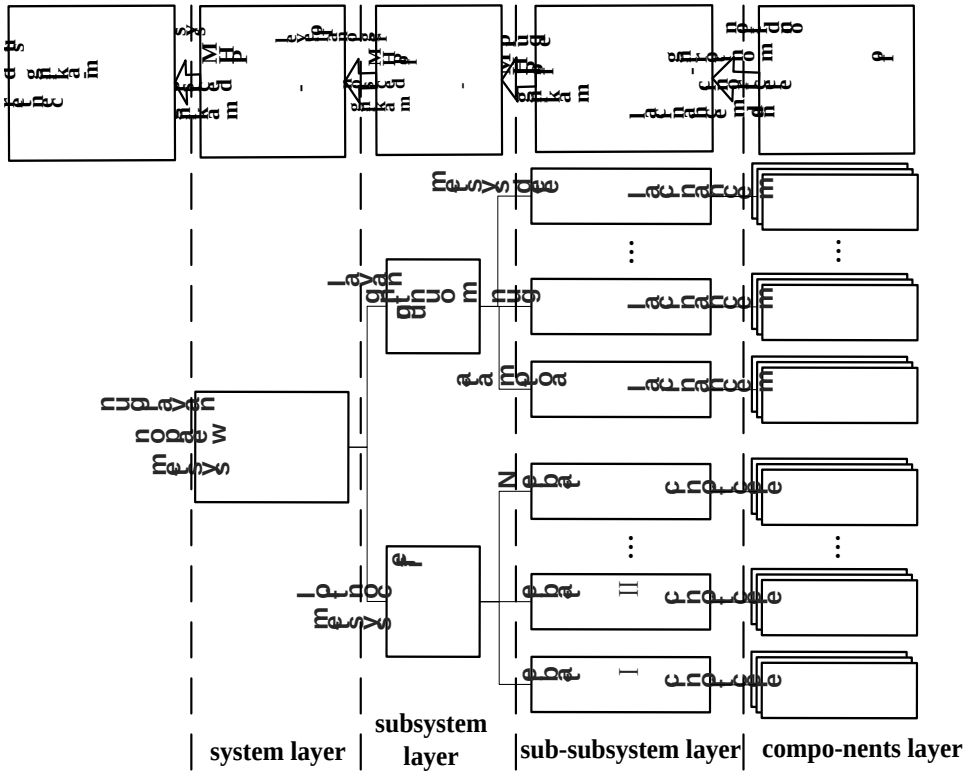

Fig.1. The focus-distributed structure of PHM system frame of naval gun weapon system

PHM system frame of naval gun weapon system is to divide the system into four levels from top to down, the top floor is the system layer, the second floor is the subsystem layer, the third floor is the sub-subsystem layer and the ground floor is the components layer [5]. Among them, it is to implement PHM system level decision-making on the top floor, it is to implement equipment level fault detection, diagnosis and prediction on the subsystem layer, it is to implement regional level fault detection, diagnosis and prediction on the sub-subsystem layer, it is to implement the state detecting of each component on the components layer. The information is transferred to each layer by bus network. The ground floor is the information source of failure prediction, which refers to the data acquisition system distributed in the each subsystem of naval gun weapon system, the system status information collecting is referred to the regional level of PHM prediction center, PHM prediction center judge the current state of subsystem and predict the fault preliminary according to

the preset parameters and decision-making model, and then refer the results to the superior PHM prediction center. The management center of equipment level is set in subsystem layer, each one has the function of information collection, information processing, information fusion and fault detection, diagnosis and prediction, which carry out further assessment, diagnosis and prediction for the health status of subsystem and its component by the redundant information of predicted results and status data redundant information from the lower level PHM centers. Each equipment management center upload the equipment failure information disposed to the system level PHM decision-making center. The system level PHM decision-making center identify and isolate the fault through the correlation analysis of all fault information of naval gun weapon system, and get the maintenance decision-making plan finally, which is reported to the superior PHM decision-making center. Accordingly to those information, the superior PHM decision-making center determine the health status of system, prepare the maintenance plan, and make up the maintenance scheme.

2.2 PHM Function Module Constituents of Naval Gun Weapon System Based on Data Analysis

The core of PHM of naval gun weapon system based on data analysis is to carry out knowledge mining from the large number of maintenance information accumulated. First, it is to take the correlation test for observation data collecting from each sensor and eliminate abnormal data. Second, it is to find the related status factors with the naval gun weapon system (subsystem, sub-subsystem) by running the knowledge of data mining and the corresponding data mining model and the repository components of result evaluation and consistency maintenance. Finally, according to the maintenance decision-making target set by the mission (including cost, availability, task completion, etc.), it is to get the status value of equipment maintenance, then, it is to make out maintenance decision-making plan according to the comprehensive evaluation of the current running state sampling points of naval gun weapon system and the compare with the status value of different maintenance level. Accordingly, the PHM system function module of naval gun weapon system is set up [4], as shown in Fig. 2, each subsystem and sub-subsystem can be cut according to the requirements of the corresponding function based on the function modules.

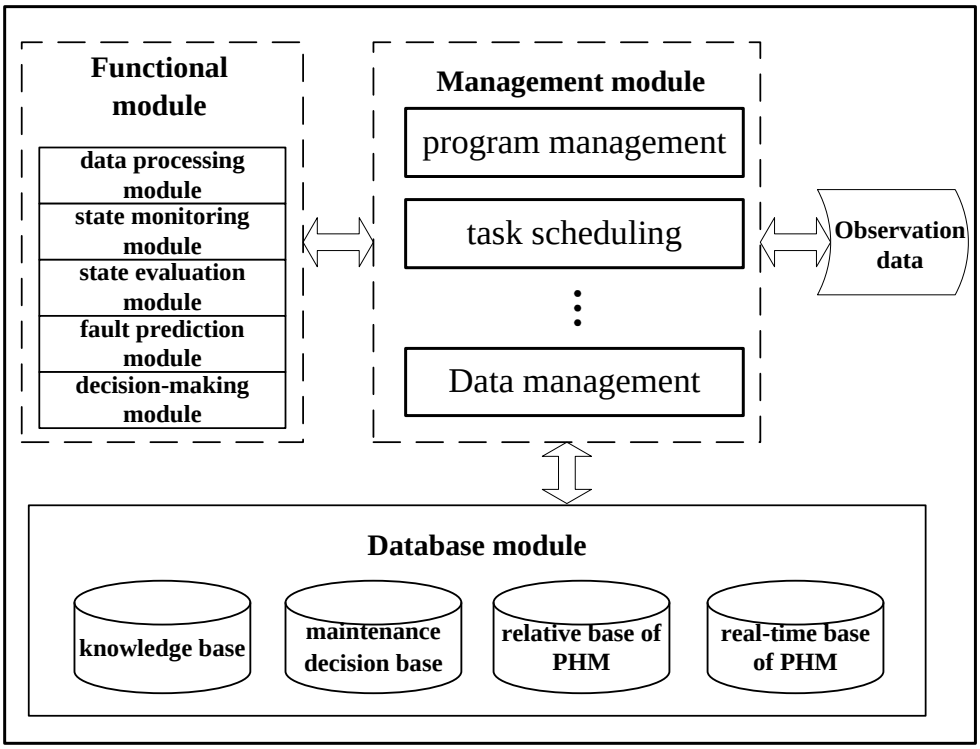

Fig.2: PHM system function modules of naval gun weapon system

Management module: it is to complete the function of user management, data input, data backup, data export, etc., provide complete information management and PHM process management for all

levels of PHM objects; realize the function cut of each subsystem or sub-subsystem; complete the management of some preset parameters, the condition monitoring data of history, the result information storage of history, etc., and realize the integrated management of PHM database by the human-computer interaction interface.

Database module: Real-time database storage information of PHM come from real-time condition monitoring information of sensors; relational database of PHM store other data information related to the whole software running, such as system performance parameters, condition monitoring data index, failure criterion of information, FMEA forms, domain expert knowledge, fault prediction, etc.; knowledge base store some general decision-making model and algorithm module[5], including failure physics model of machinery component, degradation trend model, auxiliary decision-making model, as well as a variety of filter algorithm, smoothing algorithm, prediction algorithm, data processing algorithm and training algorithm, etc.; maintenance decision base is made up of seven rule base, including the reliability decision rule base, the maintainability decision rule base, the monitor decision rule base, the economy decision rule base, the judgement rule base of maintenance support ability, the selectness rule base of maintenance way and the control rule base, etc., the front six save factual knowledge, the last one save knowledge of control rule.

Functional module: Data processing module is mainly to make the monitoring data of status obtained to process into the format of the system requirements, the output data includes the sensor data by the filtering, compression and simplified, the spectrum data and noise data, and other characteristics, etc.; condition monitoring module is mainly to compare the data obtained to the various limit/threshold parameters data preset and failure criterion, etc., monitor the current state of system, and provides the ability of fault alarm; state evaluation module mainly receive from different state monitoring module and other relevant data module, evaluate the status of naval gun weapon system, such as whether there is parameter degradation phenomenon; failure prediction module mainly utilize the data information of any of the above modules comprehensively, evaluation and forecast future state of naval gun weapon system, including residual life, working hours, etc.; decision-making reasoning module is mainly to receive the data from the state monitoring and condition assessment and failure prediction, generate the suggested measures of system replacement and maintenance instructions, carry out the maintenance support measures at the right time.

3. Analysis of key Technical

Data acquisition and sensor technology. For research on PHM of naval gun weapon system, firstly, it is to determine the indicators of state parameter, which can represent the system status of fault/health directly, or the status information needed, which can reason and judge the system status information of failure/health indirectly. This is the data base of PHM system, the application of sensor technology good or bad will directly affect the effect of PHM system. The requirement of PHM system for sensor is small volume, light weight, high sensitivity, connected pretreatment unit to the Internet easily, adapted to different work environment system and external conditions, unsusceptible to the noise disturbance influence of electromagnetic radiation and vibration. The common advanced testing sensor used are optical fiber sensor, wireless sensor, virtual sensors, smart sensors, piezoelectric sensors, etc.

Data processing technology. Due to the different data types required by the different status monitoring and health assessment and fault prediction methods, it need to make the raw data information collected for all kinds of pretreatment, so that the data format to meet the requirements of the subsequent processing, also facilitate data transmission and storage. Pretreatment include data to eliminate noise, analog-to-digital conversion, smooth filtering, signal compression and signal autocorrelation, etc.. It need to choose the data processing methods and techniques according to different purposes, such as, feature extraction technology is in order to carry out fault identification and fault isolation, data reduction technique is in order to eliminate the redundancy of original data to facilitate further processing, cycle count method is to transfer the continuous data into discrete

data easily, etc..

Data warehouse and data mining technology. Research on PHM architecture of Naval Gun Weapon System based on the data analysis need to collect, analysis and research the data by the data warehouse and data mining techniques. Data warehouse is the data set of subject-oriented, integrated, relatively stable, reflecting the historical changes, and get a lot of information extraction, storage, classification, and provide auxiliary decision making support for the practical application [5]. Data warehouse carry out conversion, fusion and integration for the huge amounts of data underlying, comb into the data view oriented the whole system, provide data storage and information integrated for decision support. Data mining is to get the characteristic information automatically of associated, change, model, abnormal and meaningful from the large information data, automatically analyze the data from the data warehouse and carry out inductive reasoning, then explore the potential patterns or association. Data mining is the process to find various models, outline, and export value from the data set obtained, include three methods with classification and prediction, association analysis and clustering analysis.

4 Conclusion

With the increasing complexity of modern naval gun systems, the requirements for equipment maintenance are getting higher and higher. In view of the deficiencies in the reactive maintenance and preventive maintenance methods of naval gun systems, this paper analyzes PHM architecture of naval gun weapon systems based on data analysis, and proposes the system structure and main functional modules. The modules are designed to improve the life cycle health management capabilities of naval gun systems, and can provide reference for relevant scientific research and maintenance decision makers.

References

[1] SUN Bo, KANG Rui, XIE Jin-song. Research and application of the prognostic and health management system[J]. Systems Engineering and Electronics. 2007.10:1762-1767.

[2] QIU Lijun. Study of Key Technology for Prognostics and Health Management System of Weapon Equipment[J]. Ship Electronic Engineering.2012（5）:17-18.

[3] Wu Ming-qiang, Fang Hong-zheng, Yi Da-wei. Fault Prognostic Approach and Application Technique Research of Complex System[J]. Computer Measurement & Control.2010,18（1）:70-77.

[4] ZHANG Liang,ZHANG Feng-ming,LI Jun-tao,LI Yong-bin. Research on On-board Prognostics and Health Management System Architecture for Operational Aircraft[J]. Journal of Air Force Engineering University(Natural Science Edition).2008,9（2）:6-10.

[5] LUO Hua, RONG Hao, PENG Le-lin. The Research for UAV Prognostics and Health Management[J]. Aircraft Design.2009（4）:52-55.